Department of Bioresource Engineering
Design 3
BREE 495

O.E.W.S
Operator Early Warning System

Presented by:

David Giard
Darius Naderpour

Presented to:

Dr. Raghavan

Macdonald Campus of McGill University
December 3rd, 2006

Table of contents

Equation List

Problem Statement

A company called Les Fermes Saurette, owner of a float of machineries specialized in vegetable (pea) harvesting, has been contracted to work 6 harvesters of the combine variant for crop gathering during harvesting season in order to supply the Bedford factory of Les aliments Carrière; a company specialized in food processing. The minimum number of pea combines capable of supplying the Bedford factory on a constant rate basis is 6 combines harvesting 24 hours, 7 days per week. Les Fermes Saurette has frequently not been able to operate the full 6 combines which they are contracted to do due to damages that the combines receive from the following sources, but are not limited to:

- Collisions due to inexperienced drivers
- Collisions due to inadequate field of vision tools
- Collisions due to bad work conditions
- Collisions due to damage received by running combines into ditches and other obstacles

As a result; the company Les Fermes Saurette is losing money due to the inefficiency of the combines not being used, and/or costing money from being in the shop, being repaired or waiting for replacement parts. The factory processing the vegetables is affected as well by a loss of capital due to the lagging of the factory processing the raw material which is supposed to be harvested by Les Fermes Saurette.

The combines in question are very expensive machinery worth over $500 000 each. The machine parts are expensive and long to acquire from delivery since parts have to be shipped from France. The fact that no spare combines can be used to replace another combine in case of major repair and the time needed to ship/receive parts from Europe is a major challenge in making the company Les Fermes Saurette economically healthy.

A solution to the said problem above is sought.

Objective and Scope

Goal: To develop a method or concept which will minimize the capital loss from the damages that occur due to negligent and/or inexperienced drivers by creating a warning system that will warn the operator when he is too close to another operator or a large object.

The scope of this design project will encompass the combines working in a field implemented with an early operator warning system (EOWS) designed to cause operators to be more vigilant when driving the combines which in turn should reduce collateral damage.

Initial phases of the project development will involve the research and development of possible systems that can be used to aid operators be aware of their surrounding. Once an adequate system has been reached, then we will look at implementing this system on a small scale to test the practicality of this system. Projections about how our system can be used alone, and in conjunction with other systems will be made and explained in our discussions section.

Method

Description of Site or Context

Les aliments Carrière, the leader in the province of Quebec and Ontario in the post-harvest vegetables processing industry, is contracting *Les Fermes Saurette* Company to harvest fields rented by Aliments Carrière in Bedford along with factories that have specialized harvesting machinery which will be referred to as “combines”. Les aliments Carrière owns 7 factories of which 4 are located in the province of Quebec and 3 in Ontario. Each factory gives contracts to the farmers surrounding the factory plants within a radius of about 75 km to grow the desired vegetables which will be harvested later at the end of the summer season and processed in the factory that they have signed the contract with. Each factory owned by Les Aliments Carrière also gives job contracts out to smaller companies that own specialized combines to work for them during the harvest season. In Quebec, Les aliments Carrière rent annually about 18,600 acres (5727 hectares) of fields on which will be growing peas and another 8,400 acres (3400 hectares) on which beans will be planted. This very large area (a total of 27000 acres or 9127 hectares) has to be harvested in a short period of time; a period of time in which the 7 factory plants are expected to process at full capacity, 24 hours per day, 7 days per week during a period of about 45 days. The combines are thus working 24/7 to accommodate the factory plants for which they have been hired to harvest for.

To do so, the human resource management in Les fermes Saurettes hires operators that are working 12 hour shifts 7 days per week during the required 45 days of the harvesting period. Due to the relatively bad work conditions and low salary involved in operating combines, most of the operators are students that are looking for a summer job and have no experience with agricultural machinery and are not aware of danger of operating heavy machinery. Adding minimal or no experience in operation of combines, very minimal job training and bad operating conditions such as bad weather, working during nights and low sleeping/rest

periods are the causes of accidents that are more often than not due to a collision of one form or another, especially between the combines themselves. These collisions happen more often at the end of fields where the area to rotate the combines and the proximity between combines is the smallest. The usual pattern to operate the combines in a relatively small field is to put them one after the other in a straight line and each of them harvests a row of crop. However, at the end of fields, since the turn radius of the combines is quite large, the vision tools (two mirrors located on each side of the combines and no lights at the back of the combines) are inadequate when operating during nights and there is most of the time a lack of communication between operators, collisions may, and are likely to occur. The collisions of these machines effectively put out of commission a certain number of these harvesting combines due to damages and the logistics involved in getting these machines repaired. In the meantime, as a result, there's a huge capital loss due to the machines not operating both for the company Les Fermes Saurette and Les Aliments Carrière.

The second most important source of collision or damages occurring to the harvesting machineries is the negligence of operators that run combines into ditches, creeks, building or trees surrounding the fields. Once again, the lack of experience, inappropriate vision tools and bad working conditions lower operators' alertness of surrounding obstacles that may appear in their way. Moreover, the limits of the fields are sometimes very difficult to distinguish, especially during night, which enlarge the possibility that an operator run into a ditch or hit an object. Most of the time when a combine runs into an obstacle, the feeder, which is the front part of the combine, is damaged. Unfortunately, the feeder is one of the most important part of the combine when dealing with the quality of the product. Any damaged parts of the feeder may result both in a decrease of the quality of the product harvested or field losses due to inadequate picking of the feeder (some vegetables are not harvested and are left into the field). These impacts on harvesting efficiency and quality are the reasons why any damaged feeder is a threat for both companies Les Aliments Carrière and Les Fermes Saurette.

Source of Information

The source of information for the problem of this project will be David Giard's contacts from where he worked during his summer breaks. We have received the approval of Normand Saurette, owner of Les Fermes Saurettes company, and he is willing to help us by giving us important information and details about the machinery involved in the project. He is also willing to divulge how the company is managed and how the contract is established between Les Fermes Saurette and Les Aliments Carrière.

We are also receiving help from Jean-François Gaudette, employee of Les Aliments Carrière as a field manager. He is giving us information about the status of Les Aliments Carrière such as the number of factories, how they rent lands and how they distributes contract to farmers and harvesting companies. He is also providing us information about the average cost of machines in non-operation in the factories around the Quebec area.

Luc Lussier is the mechanic hired by Les Fermes Saurette. He is in charge of maintaining and fixing the combines. He is giving us information about the frequency, type and cost of damages that occurs on combines.

Another very important contact is Mister Yves Duquet, agriculture manager for Les Aliments Carrières, for the Bedford factory. This person is in charge of everything that relates to agriculture in Les Aliments Carrières. Mister Duquet is hiring Mr. Saurette to harvest vegetables that will be used to supply the factory, and he is the direct superior of Mister Jean-François Gaudette.

Luc Choquette is an operator working on combines during harvesting period. He has been operating combines for more than 10 years so he is aware of what are the difficulties and challenges of operating heavy machineries.

Robert Malouin, president of *Innotag, Agriculture Innovation, Technology & Precision Farming*, has been very useful concerning GPS technologies related to precision farming systems. He gave us a lot of information about GPS-guided machineries and how these technologies may be integrated to our project.

Dr. Ning Wang has been providing essential information about the type of sensors that can be used for our design proposal. She has also proposed certain

ideas in which might facilitate our work. Dr. Wang has also provided us with tips on where to look for information pertaining to the development of our ideas for this design project, such as key websites, or reference material. She has also been very active in helping us with the development of our circuitry systems.

Parallax forums (www.parallax.com) community is proving to be a good source of technical information for the design ideas behind this project. Parallax is a company that among other things specializes in microcontroller chips which are used for data processing from a variety of input forms (such as sensors). This is pertinent to our case since the input will be coming from a sensor and, more likely than not, enter a microcontroller to then be processed and outputted in a form of our choosing (Such as warning the operators). Much discussion among the Parallax community and ourselves is foreseen as much of the technical know-how will be obtained hopefully from there.

Mr. Neil Hellas has proven to be quite supportive and helpful in the actual design of certain circuit systems that we were unsure of how they should be setup. His insight was greatly appreciated as the knowledge he provided us with could be applied to different areas of our work.

Dr. Raghavan has been a positive support for our inquiries about expanding our design project on this topic. Dr. Raghavan has directed us towards which professors we should be speaking with concerning this design project and he has also provided us with material that proved invaluable to the creation of this design report

Input Data

What type of Data will be needed?

The Data that is needed for our design process are the links between Les Aliments Carrière and Les Fermes Saurette. We will investigate how these two companies are managed, what are the machineries that are involved in the process, what is the importance of the problem discussed above (its sources, some statistical data about the loss in capital when repairing and fixing parts after

collisions, etc) and what are the impacts on the quality of the final product. Furthermore, other important information concerning the technologies that can be used to design a system that can diminish or eliminate the problem of collisions is providing very useful to help determine what possibilities exist for us to properly design a prototype of the Early Operator Warning System. Capital cost of the collisions, the final price of a prototype and the expected price of a real scale warning system are needed to make a cost analysis of our project. However, we are unsure that we will be able to find ample real-life, real-sized components because our knowledge on circuitry is rather simplistic and thus would be limited in being able to project what would be necessary on a real scale.

Machinery Types

Briefly, concerning the large machinery; Les Fermes Saurettes owns two different brands of combines. One is made by BCMH and comes from France. The other kind of combines is a “Mather & Platt” and is made in “United States”. The average price of a brand new combines is about half a million dollars. This astronomic price is due to the fact that these combines are very sophisticated and they have to be built and designed is such a way that they can deliver a very fragile and perishable product at a very high standard of quality. This high cost is also due to the very restrained construction of such machinery (there is about 5 owners of such combines in Quebec for a total of about 30 pea combines. Parts are also very expensive.

Other pertinent information

Other types of data that we need are the types of signals and potentials of different sensor systems relating to their capabilities and how they may best serve us. There are many different systems available to us on the market, some will be more affordable than others, and we will try to find the lowest cost solution possible.

Cost of damages

Damages due to Labor, parts and repairs

According to Normand Saurette, owner of Les Fermes Saurettes, the annual cost in repairs, parts of combines related to collisions between two or more combines and collision with other structures (such as building, posts or trees) is about $25,000 to $30,000 dollars. In fact, half of the annual budget in repairs and maintenance is due to repairs from collisions. Moreover, the spare parts for the BCMH harvesters have to be shipped from France, and are usually sent by frigate over the waterways, this taking a considerable amount of time to get a part from the supplier to the customer. Parts are available to be shipped by air, and the pieces are usually deliverable within a week; however, the prices sky rocket when being sent by plane.

Cost of Idle Machines

According to Normand Saurette and Luc Lussier, the money lost due to not operating the machinery is about $30,000 per year. Since Normand Saurette is paid by Les Aliments Carriere in relation with the number of acres harvested, every time a combine is stopped or non-operational, money is being lost.

Another cost related to the malfunction of machinery is the money lost by the factory. When one or more combines are broken, the rate of raw material delivered to the factory is greatly diminished in such a way that, sometimes, there is a lack of peas at the factory. This lack of vegetables is very critical for the company because there are more than 60 employees working at the company at the same time and even though there is no vegetable to process, employees have to be paid anyways. The average time that the factory is shut off due to lack of peas varies depending of the gravity of the problem encountered in the fields. It has been reported that the factory production have been delayed for more than 1 hour due to combine collisions in the field and many more hours where the rate of vegetable processing has been slowed. It is important to note that the amount of money lost by the factory due to lack of vegetable is more than thousands of dollars per hour.

Design Approach

A list below is provided with the concepts that are available for our design project:

1. ***To Develop an early warning system (EWS) capable of disturbing the operator when a combine comes too close to another one causing the operator to be more vigilant in his actions when near another combine*.** The design emphasis here will be to create a tool that can be used by large machine operators in adverse or non adverse conditions that will enhance the security of operating these large machines. The system will not have a direct impact on the operator or the operation of the machine, but instead it will be an add-on system that will detect close by hazards that the combine could potentially collide with and subsequently cause damage to either the machine itself or the object the machine came into contact with.
2. ***The EWS as a multiple sensor network****.* Multiple sensors were proposed by Dr. Wang for us to research more in depth solution. A few suggestions were proposed as for the technologies that we should be looking at and considering; laser sensors, sonar sensors, infrared sensors, and radar systems were among the suggested solutions. Through brief discussion it was determined that infrared sensors would most probably be the most cost-effective solution since they have a low cost and would be suitable to act as an object detection sensor. The idea behind the infrared sensors would be to have multiple infrared sensors located at certain key points on the machines such as at the four cardinal points on a machine (front, back, left, and right) that are all linked up to a display of the machine near the operator that will light up individually when a specific infrared sensor picks up an object nearby. Initial construction will be based on a build up design

project where we will start in numerous steps of complexity that will start with simple steps and as the design project moves on in time, the construction will become more complex and involve more components on a scaled version to reflect what could be implemented in real life with estimated costs reflecting those scaled up designs.

3. ***EWS could be a GPS real time system***. This is advantageous for ditches and areas to not go near. However, upon discussion with Dr. Wang, it has been determined that this was not a cost-effective solution since readily available GPS systems do not have a precise enough resolution to effectively control and manage an early warning detection system as our intentions outlined. Readily available GPS systems will have a resolution of more than 10m where we would really need something more accurate than 1m. More expensive GPS systems might have the resolution (accuracy) capability required for a project of this scope, but they are extremely more expensive than their more affordable and less accurate counterparts, and much more expensive than infrared sensors.
4. ***EWS needs an on or off***; for circumstances such as where the machine is turned off, or turned on but is necessarily close to another machine. A master switch is planned to be implemented into our sensor network system which will allow the EWS system to be turned on or off. There are some obvious pros and cons to this aspect since operators who do not like this feature would be apt to turning it off and thus negating the safety features we are trying to develop for these large machines. We will venture into considering connecting the EWS with the master power of the machinery so that if the machine is running then the EWS will be running as well, that way no need for an external power supply for the EWS. Research into what would be the most effective manner of making

sure this system cannot be turned off at the operators whim will be done and documented.

As mentioned previously, our intentions will be to start with a simple system on a small scale to make sure that our setup can work on a larger scale. Our smaller scale design would be based on the concept of the following model:

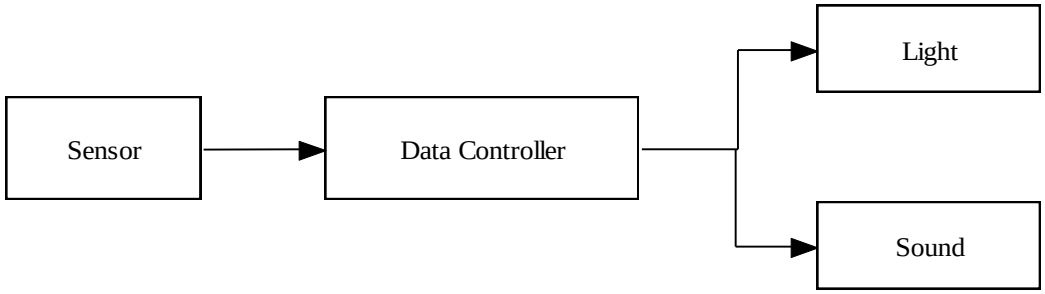

Where the sensor would most probably be of the infrared variant, the data controller would be a Basic Stamp 2 (offered by Parallax Inc.) and the light and sound output would be a small LED and frequency emitted that can be obtained at many electronic hardware stores for a cheap price. This simple system will be tested on model cars or simply a stationary system. An even more simple system was theorized that did not involve a data controller which was suggested by Dr. Ning Wang. A sensor that would output a 5 Volt signal would cause an inductor

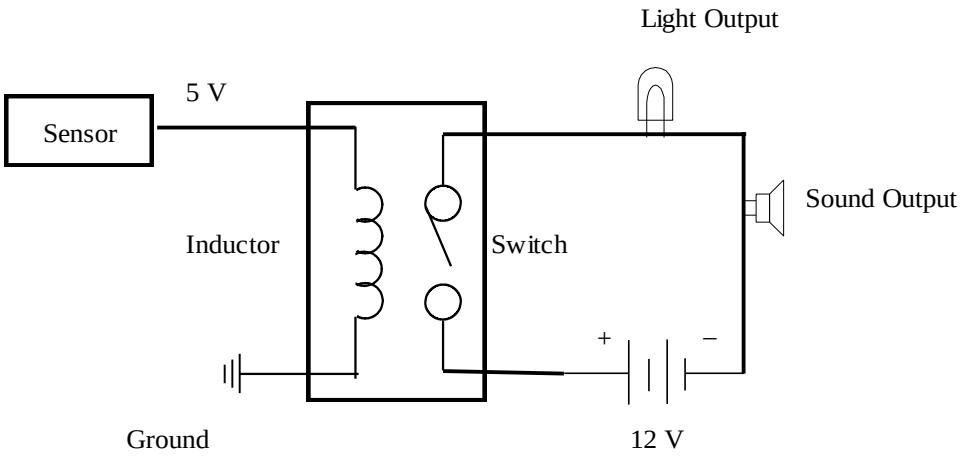

to generate a magnetic field which would close a switch that would in turn activate a light output and a sound output. This seemed to be a very feasible

system to mount onto a combine where we could even attach the output power supply to the combine power box.

Expected Output and Results

The end state of this design project will be a system that can safely and effectively warn the operators of these machines. So far we have come to the conclusion that a sort of system including;

- A sound tone

And / Or

- A flashing light

would be the most effective means of rendering the operator more vigilant.

During the initial design phase, we plan on making a simple circuit to see if our concept can actually work, once that simple circuit has been created we will attempt to create more complex systems that involve multiple sensors. We're thinking of some sort of circuit board that has detection sensors on cardinal points on machines. This system will be able to detect where an "obstacle" is, and then relay that information back to a LED panel near the HUD of the operator indicating where the obstacle is corresponding to whichever sensor it was detected by. Basically giving the operator a "top" view of his machine through digital means.

Actual Design

Approach

Through many discussions with varied professionals and teachers we have come to the conclusion that a more simplified approach to demonstrating the conceptual design to this project was necessary. Concepts and ideas were presented in the sections above were very good theoretically, but were a very difficult to actually implement and design in a practical setting with our limited

knowledge in electronics and time constraints. Thus it was decided to attempt to design a simplistic sensor system that can be attached to our combines that would be the most cost efficient and simple to design.

The results of our inquiries led us to develop an infrared sensor system that uses an infrared sensor, emitter and a light emitting diode in a simple circuit which can be used to warn the operator when he is approaching an unsafe distance to another operator on the field.

Constraints

Constraints that we knew we would have to deal with were the constraints of these large machines having to operate at relatively close distances of one another. Also an important thing to consider was that our sensory system should not be affected by the material that the combines would be harvesting. In other words, the environment that our combines would be operating could not affect the sensors.

Financial constraints also affected this project as funding came from our very own pocket. We have invested approximately $100 into the research and development of this project and have come to realize that our system will be affected by such a constraint due the unavailability of high tech solutions or more precise and elaborate sensory equipment. This had a major role to play when we had to decide what type of system to try to develop because we wanted to develop a sensor system that could be applied to these large machines and not be affected by many of the factors we knew we would have to deal with in our constraints; such as the detection of crop fields and their vegetation getting picked up by our sensors in comparison to the actual combines harvesting in the field.

Time was also a factor in which we had only a few months to develop a system that could adequately resemble something that could be applied in the field to respond to the demand of reducing the cost of damages to the combine harvesters. Meeting with professionals and technical advisors could only be given at certain times which effectively reduced our working time on the project.

Simplicity was perhaps our largest factor in trying to design a sensory system that could be applicable to our situation and help warn operators that their machines were becoming closer and approaching a critical distance to avoid collision. We have managed to create a simple model that needs to be demonstrated in controlled conditions that effectively displays the conceptual design behind our thought process, and where it is to be scaled to a realistic size in terms of power and range detection then we believe it would remain just as simple which is an asset of this design.

Materials Used

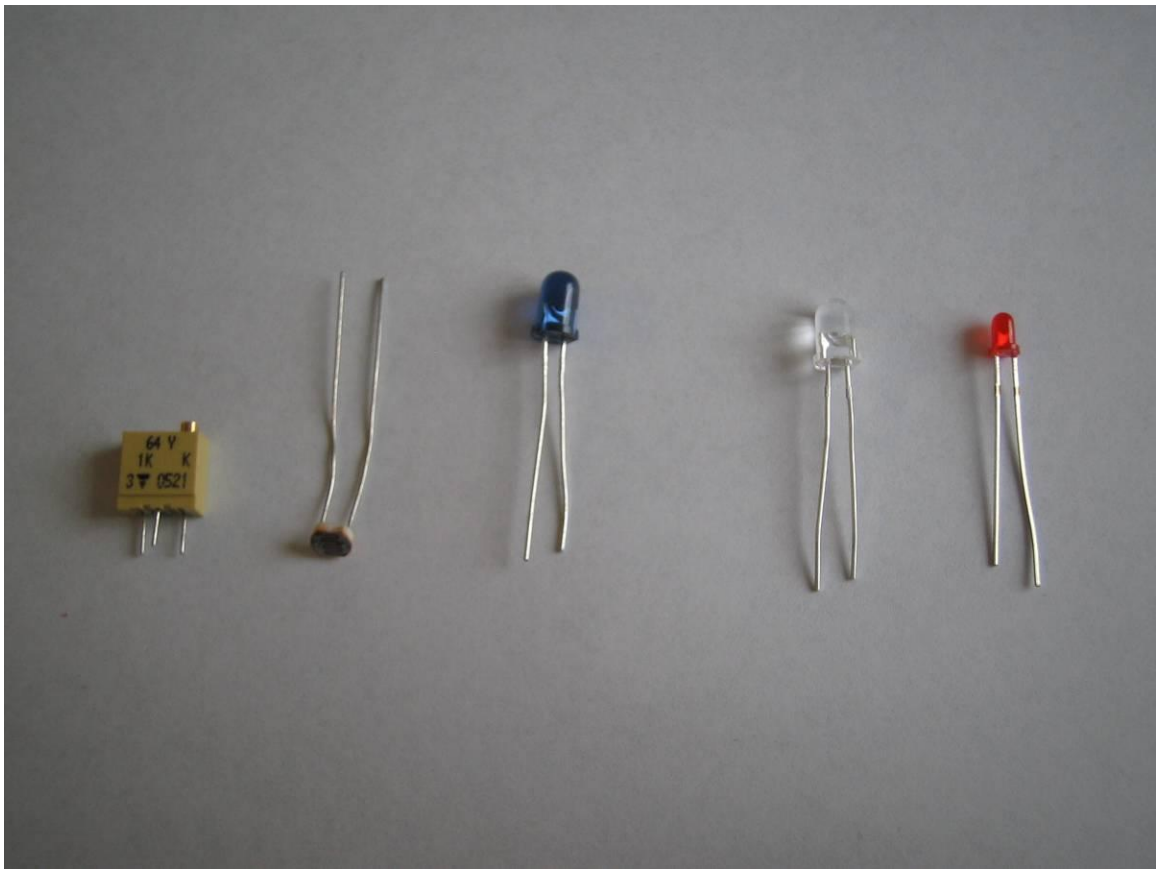

From LEFT to Right: Potentiometer, Photocell, IR Emitter, IR Sensor, LED

Potentiometer: 1k Ohm variable resistance, with 25 turns to adjust the resistance from 0 to 1k.

Photocell: Listed as 5-10k light resistance, how ever we found the resistance to be quite different than the listed range given different lighting conditions.

IR Emitter: This infrared emitting diode is a standard 5mm IR diode that emits at the 940 nm wave length

IR Sensor: This infrared sensing photo transistor senses IR in the 880 nm spectrum and is a standard match for the emitter above. We had problems with this sensor as it would also pick up all ambient light produced by light sources, which sometimes would cause us to believe our circuit was flawed.

LED: The light emitting diode was a standard LED that is standardized for voltages of 2.5V with low amperage.

Two tools that were essential in the crafting of this circuit system were a Network Multi-tool made in Taiwan used to strip, cut and modify wiring used in the circuit, and a Fluke Multimeter 73 that was used to measure different levels of current and resistance at different points in our circuit.

The latter, along with the next item were borrowed from the Bioresource Engineering Electrics Lab from Dr. Ning Wang.

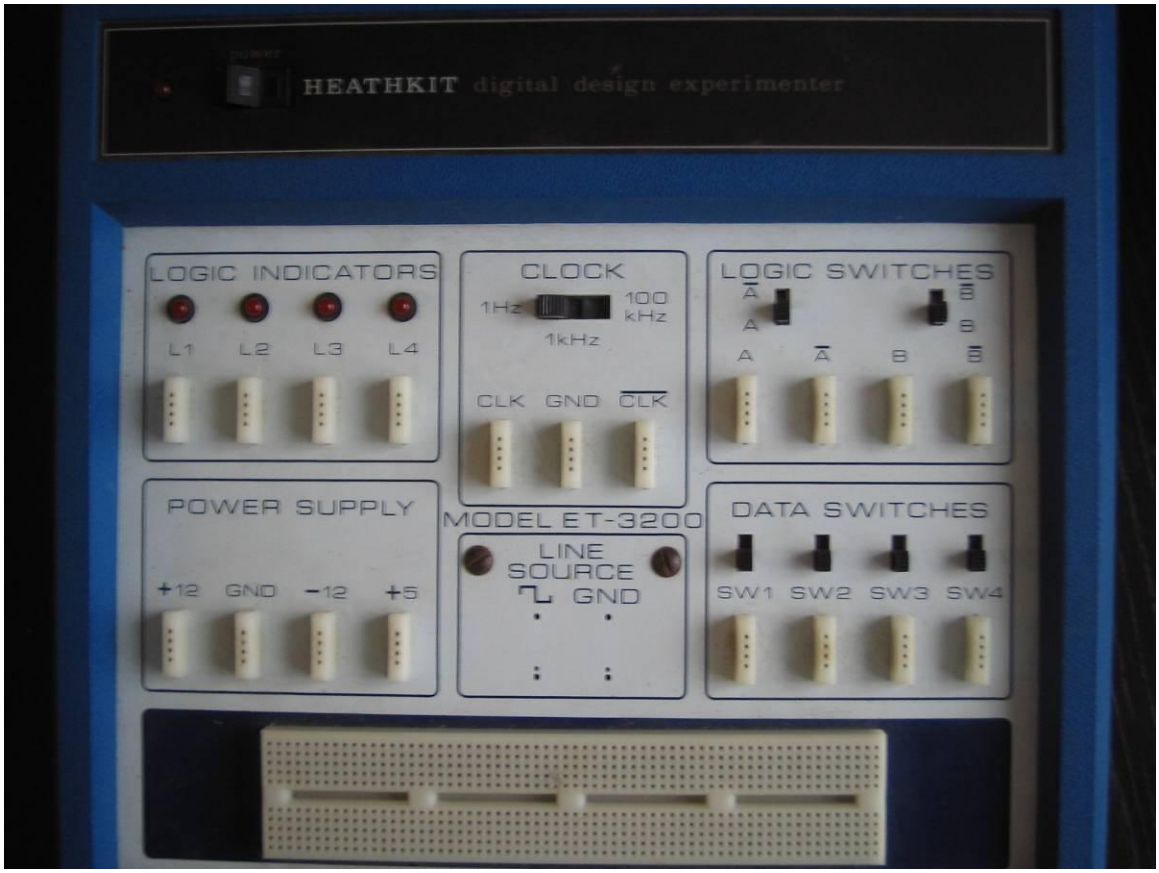

The *HEATHKIT digital design experimenter* was another tool that was borrowed from the Electric Lab that was used for testing the circuits on the built-in breadboard along with the 12V and 5V power supply. This was an essential tool to circuit development in our trial and error methods of problem solving.

The materials above were the materials that after all our testing we finally came to realize that those were all the components we needed to solve our combine collision problem. However, we shall also present a table of all the electronic pieces we have purchased and the costs of those to reflect the research aspect of this project.

Cost of Materials

Dealership:	**LA SOURCE PAR CIRCUIT CITY**			
Article #	Item Description	Alternative Name	Quantity	Cost Per Item
640-2340p	Ruban Isolant/5	Electrical Tape	1	1.99
278-1302	Fil de Montage	Electrical Wiring	1	8.99
271-9017	Resistence en c	Assorted resistors	1	3.99
270-0324	Battery Snap 9V	9V battery clips	1	4.99
276-1622	Assorted LED 20PK	Assorted LEDs	1	4.99
276-0169	PB10 Proto Boar	Breadboad	1	29.99
230-1875	9V Alkaline EAC	9V Battery	1	4.99
Cost				59.93
Total Cost (taxed)				**68.3202**

Dealership:	**ACTIVE TECH ELECTRONICS INC.**			
Article #	Item Description	Alternative Name	Quantity	Cost Per Item
113453	LED Red Diffused	Red diffuse LEDs	1	4.99
178308	470 Ohm 1/4W Resistors	470 Ohm resistors	1	1.69
196199	3.5mm J-1/4 P STE		1	1.99
147809	Potentiometer 1K	Potentiometer 1k	1	5.99
Cost				14.66
Total Cost (taxed)				**16.7124**

Dealership:	**ABRA ELECTRONICS**			
Article #	Item Description	Alternative Name	Quantity	Cost Per Item
-	PHOTO-300	Photocell resistor	4	1.99
-	3296W-1-103	Potentiometer 10k	4	2.99
-	IR-Set-5mm	Infrared emitter/sensor	4	2.99
Cost				31.88
Total Cost (taxed)				**36.3432**

TOTAL COST FOR ALL PARTS PURCHASED	**121.3758**

Conceptual design

Our system as stated by the constraints above would need to be simple. We believe that we have optimized the simplicity aspect of our system and we shall present the different two main systems we have decided to attempt to design and model. All of our systems that we have developed are the ones that have two main functions; 1) the detection of an object coming closer to the sensor, and 2) a response of that object coming closer that could be used to warn the operator of imminent danger. We have thought of many systems as described in the Design Approach section, but realistically we have tried to implement two systems which will be discussed in detail below.

System 1 – Photocell Sensor

The photocell sensor system is a light sensitive system that measures the amount of light detected by the photocell and has a light emitting diode that has a varying intensity based on that level of light detected.

The exact functionality of the photocell we purchased resembles that of a resistor with varying resistance that reflects the amount of light the photocell is subjected to. The more light the photocell has, the less resistive it is, and the less light the photocell is subject to, the higher the resistance. This is shown in the table below where normal lighting conditions were using ambient light, and bright lighting conditions were using a flashlight to illuminate the photocell. The minimum and maximum values were obtained via testing the photocell by using a multimeter to measure the resistance in the different light conditions. The minimum values reflect the photocells resistance when there is nothing inhibiting light from reaching the photocell, and the maximum values reflect when the photocells are completely covered and there is no access to light (i.e.; the photocell is hidden from light within the grasp of my hand)

Photocell Resistance under Different conditions (Values in Ohms of resistance)		
	Min. Value	Max. Value
Normal Lighting	1000	20 000
Bright Lighting	500	240 000

This varying level of resistance caused problems when trying to effectively build the circuit as I could not guarantee a certain lighting condition at any given time. This large uncertainty alone was grounds for not using this circuit, but never the less we developed it and saw the limitations of such a design which will be mentioned shortly.

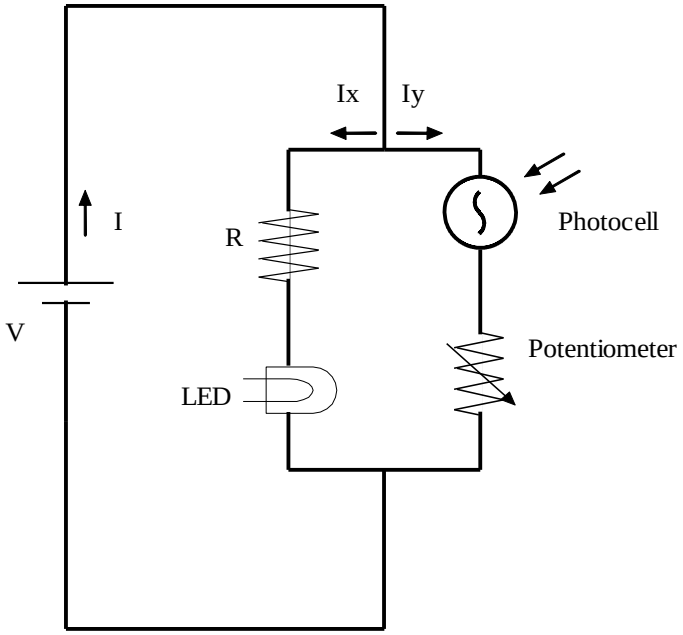

The voltages used in the design process of our project was relatively low, and there was not a grueling worry at all times about burning out our pieces as they were relatively cheap and the chances of that occurring were low due to the low voltage used in the testing and development of the photocell sensor. As can be seen from the photocell schema, a certain voltage that is produced from a

power source causes a certain current to be split at the I_x I_y junction. The amount of current I_x is directly related to the amount of current drawn by the photocell and the potentiometer. This rule is a well known rule from circuit theory of Kirchoff's Current Law, which states that the current entering a node is the same as the current exiting a node or:

Equation 1 – KCL

$$\sum I_{in} = \sum I_{out}$$

And as a result we would have;

Equation 2 – Current Balace

$$I = I_x + I_y$$

As long as we could guarantee a current of I_x passing through the LED branch of the circuit, then the light would turn on and warn the operator of impending danger. This current was to be guaranteed by the use of a photocell and a potentiometer that when combined together could add up to the appropriate resistance in the photocell branch and cause I_x current to be drawn by the LED branch.

However, we had some practical problems with this circuit that caused us to abandon using it. The LED being used in the circuit was a standard LED with a 2.5 voltage requirement and a current draw was of a few milliamps. This was one of the problems of this design; that no matter the level of current going through (as long as it was not higher than the max allowed of the LED) then the LED would be "on" at a certain intensity level. If the amount of current was higher than the max allowed, the LED would burn. The fact that any amount of current passing through the LED branch of the circuit would effectively turn on the LED and cause it to be at different intensities would be problematic for operators. Every person has a different subjective opinion on how bright a certain light is compared to another brightness level, so one operator might heed the light intensity and another operator may not be believing he is not yet close to hitting another object with his harvester.

Another problem we encountered was that in order to achieve a resistance accurate enough to supply only I_x to the LED branch, we needed our photocell to

be rather specific when returning the resistance based on the levels of light in the ambient environment. This lighting always changed, and we found that the only resistance provided by the photocell that could be considered constant would be at the maximum value provided in any given lighting situation. This effectively meant that the photocell would need to be completely covered by something in order to have no light reaching it, to provide a constant resistance, which in turn meant that in a practical scenario – the photocell would have to hit an object, or another combine to provide us with that specific resistance; which was unacceptable.

Thus another solution was sought.

System 2 – Infrared Sensor

The second system that was developed was an infrared emitter-receiver system that the way it would work conceptually would be to emit an infrared beam, reflect of a surface (another harvester) and be detected by a receiver and then warn the operator.

The advantages of this system were that the components (when available) were extremely cheap and readily available at specialty stores in the Montreal area. The figure below shows the components of the IR sensor.

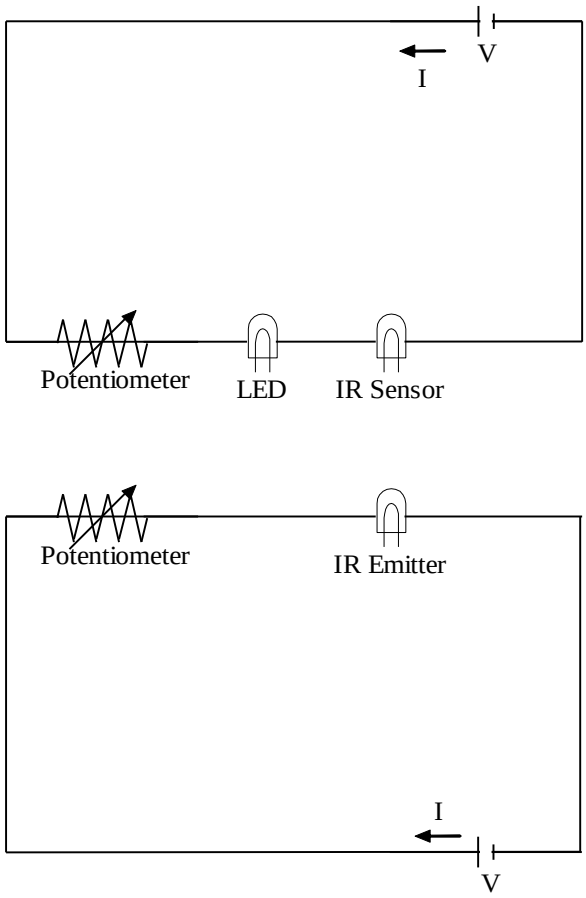

The above system virtually has two independent circuits as shown which could be implemented into a single circuit which will be shown later as it was implemented into our design. The above circuit has an infrared emitter and receiver that each has their own power supply and resistors to guarantee a certain amount of current.

Design considerations here were that the emitter needed a certain current to be able to emit at full capacity and if that level of current was higher, then the emitter would actually not emit anything at all. The LED in the sensor circuit needed to be capped on the amount of current that passed through the LED in order to not burn it. However these restrictions were taken out of our final design model since the voltages we were using were so low that we did not need to concern ourselves with the actual value of the current in the circuit.

A very important design consideration here is that the sensor and emitter had to be generally in the same location so that the sensor would detect whenever the emitter's beam would reflect from another surface, and that is why in our final design below we've dedicated a distance of 1.5 inches or less between the emitter and receiver.

Our final design circuit is shown below and it is what will be used in an attempt to actually model the circuit for presentation on a toy vehicle if time permits.

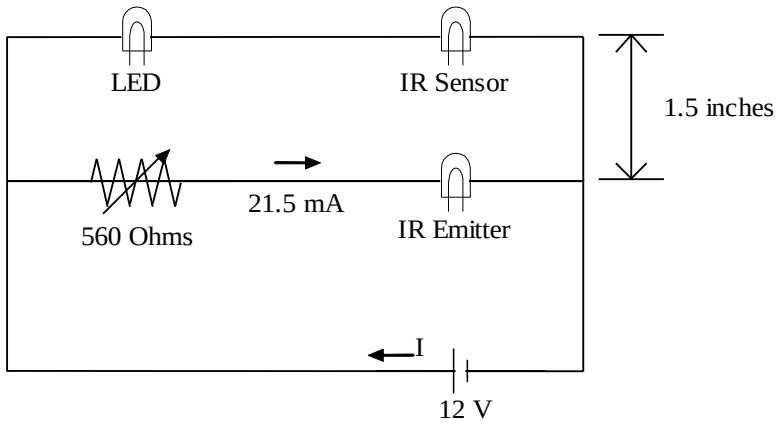

This circuit was obtained through trial and error and testing of different components. The trial and error method was deemed the most fast due to the values of the voltage and current involved and the relatively low risk of burning components. As a result, different variations of this circuit were developed, but this was found to be the best working template and one that we believed could be implemented in the field.

The resistance was varied with a 12 V power supply in order to find the optimal distance of detection that LED would turn on and be bright enough given that the IR sensor would detect the reflected beams from the emitter. From Ohm's Law:

$V=IR$

We found that the current drawn in our setup was approximately 21.5mA which enabled us to visibly and effectively see that when an object was brought near the emitter, the LED would light up very bright, thus alerting the operator that an object was very close. We found that we could safely bring an object within a few feet and detection was shown. When we approached within less of a foot, we saw that the LED was profoundly bright and that this was a good enough sign for development and prototype needs to indicate that an object is getting very much closer to the sensor.

The only downfall of this system is that due to the low power source involved, we were unable to obtain satisfactory results in very lit conditions as the infrared receiver (sensor) would detect light in certain wave spectrums that came from light bulbs wherever we were. Thus it was necessary for us to turn off the ambient lights, and display how this system worked flawlessly in the dark. Of course, our combines would not be working in the dark all the time, so this was a problem initially thought to be quite problematic. However, as mentioned below in the positive attractions this system can be scaled to respond to a more powerful power source which would reduce the impact of exterior lighting effects on the infrared sensor.

Positive attractions to this circuit were that even though our components restricted us to staying at low voltages and the distance of detection was rather low… if a more powerful power source were used, then the range of detection could be increased. The cost of such a system would thus be proportional to the specifications of the components that could be used. Larger, more effective infrared emitters and sensors could be purchased and used along with brighter lights can be used to really make sure an operator knows he is within collision distance to another object. Other advantages to this system are due to the

simplicity of the circuit, multiple sensor systems like this one noted above can be implemented together in a larger network that can be installed around a combine harvester at many different locations and could potentially be very accurate in displaying where the operator is in danger of colliding with an object. The largest advantage that we found to be the most attractive feature of this design was the low cost of the components needed to operate a sensory system that could work.

Output & Results

The results of our design were actually quite satisfactory with the exception of a few little points. We shall display photographic images of our results which show that our design was indeed working.

On the next page you will see two photographs that have our mock setup of our circuit of the Infrared Sensor system. It is important to note the main difference of the two images – the red LED on the lower right hand side of the pictures is of different intensities. The first pictures shows when there is nothing interfering with the IR emitter/Sensor pair (the dark blue and clear LED) and the second picture is the same system but when our hand is placed near the emitter which causes the infrared light to be reflected back to the sensor which in turn amplifies the red LED intensity to a point that is very noticeable.

The two images are shown on the next page together for ease of comparison. It is obvious to see that the light turns on brightly when our hand is near the sensors – which could be applied to our Combine scenario.

[Please see below]

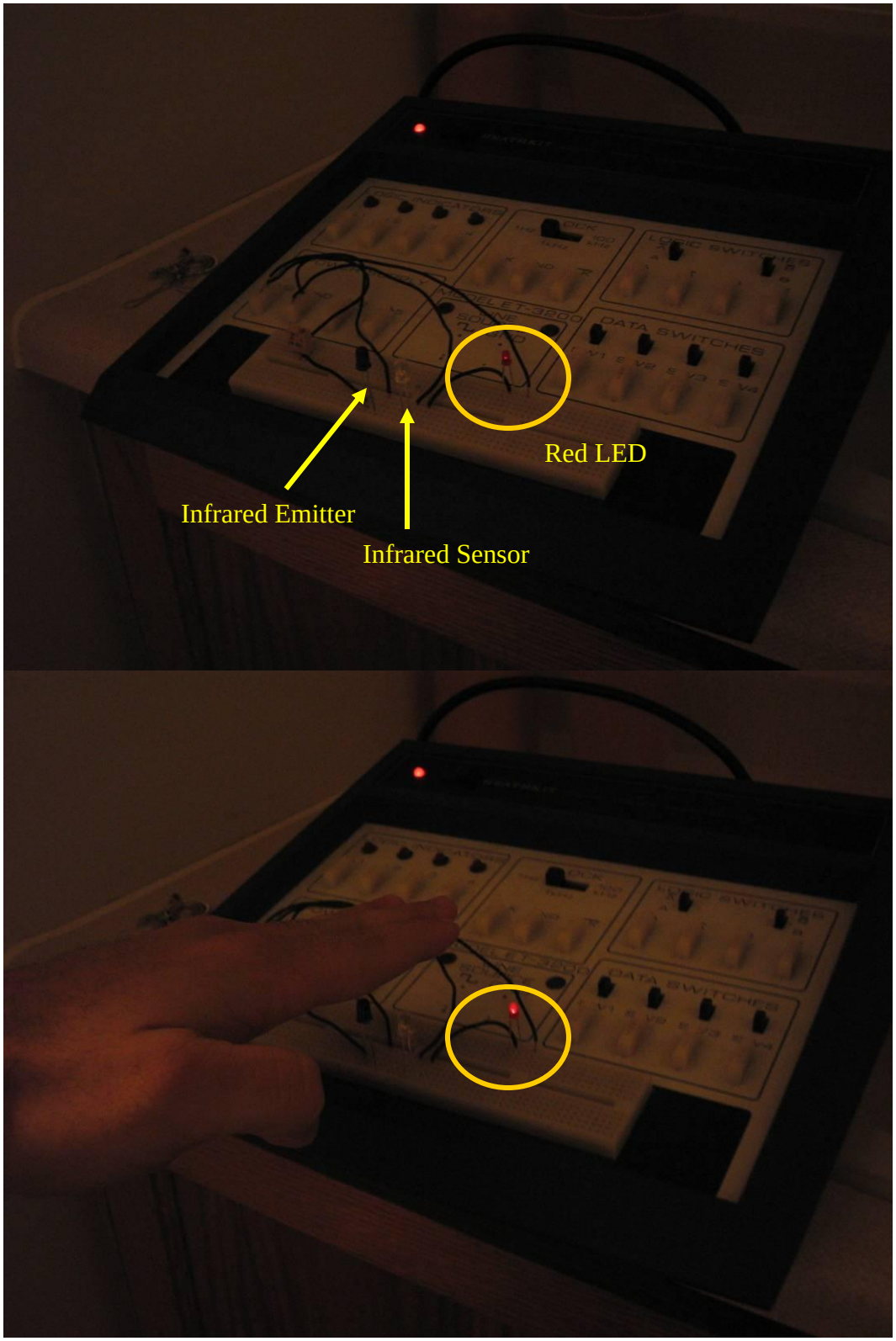
Red LED
Infrared Emitter
Infrared Sensor

Discussion

Infrared Sensor System

During our analysis of the feasibility of using an infrared sensor system we've come to the conclusion that this would not be the perfect solution to the problem of the combine machines colliding together. Although this system does work, the problem that is perhaps not apparent at first glance, and which will be shown at the presentation date of our project is that infrared sensors pick up small trace amounts of heat from all light sources. This causes our LED in our sensor to always be slightly "on", even if it is not noticeable at times. When an object comes close to the sensor, the emitter's beam reflects strongly and the receiver does pick up a lot of the IR beam and causes the LED to have a high intensity as shown in the pictures above – so as stated, the sensor does work. However, problems that we can see from the fact that all heat sources generate amounts of infrared light will duly cause our sensor to "malfunction" in the field and detect things that we did not intend it to detect in the first place such as the sun, or bright lights at night time.

A solution to this problem would be to work in the frequency domain of light. There exists frequency sensors that we could program an emitter to emit at a certain frequency, and a receiver to likewise detect a single frequency (or range) of light. This would effectively reduce any exterior influences and cause the sensor to act exactly as it was intended to in any time of day and in any light setting. Our knowledge on this topic is extremely limited and we know only that this solution exists.

However, the implementation of a multiple sensor network seems to be quite feasible, and we will try to display this at the presentation of our design project. Basically our sensor network does work, but there are better things out there. As always the more expensive a person is willing to spend the better solutions can be found.

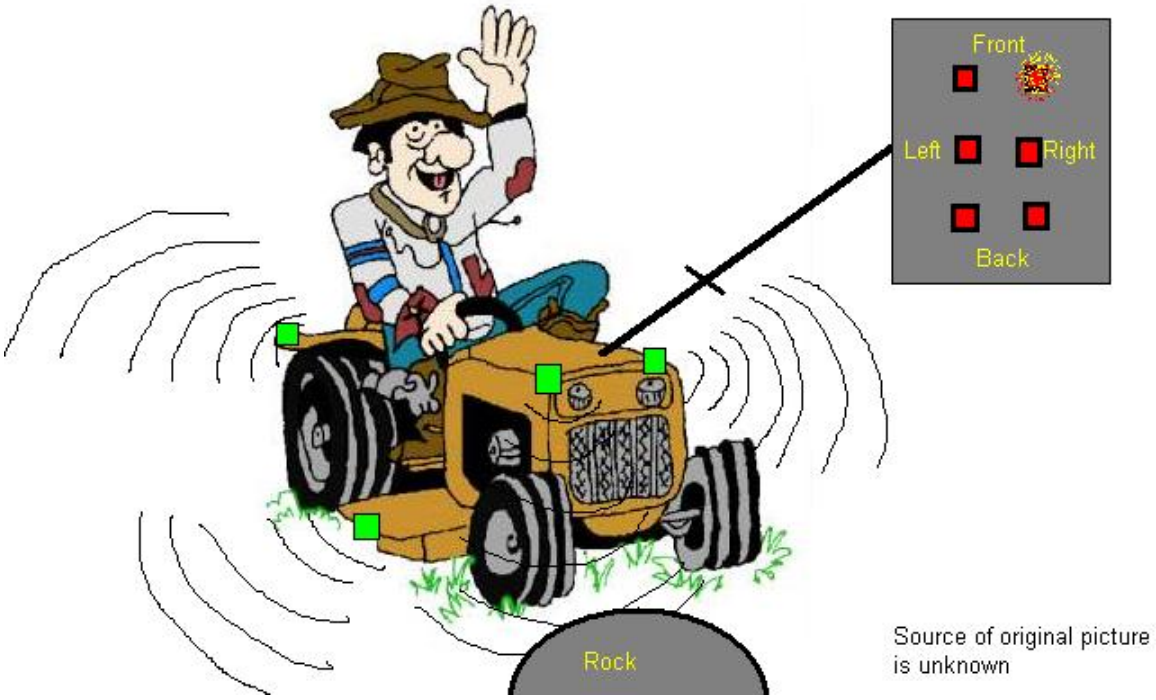

Pulsed Break-Beam System

Upon finishing out project, we have continued a somewhat limited research and we have made a contact, Mr. Razmik Musakhanean whom was is certified electrician and computer technician. Razmik during his CEGEP education actually created what was called a Pulsed Break-Beam System based on plans that the Radio Shack company had developed.

The Pulsed Break-Beam System was exactly the type of frequency sensor that we were looking for to suit our needs for this design project. The actual plans that were developed by Radio Shack will be in the appendix, but for the purpose of this report we shall explain the details of the Pulsed Break-Beam system.

The pulsed break-beam system is composed of two parts; a transmitter and a receiver. They each act together to stimulate some sort of response, in this case a LED flashing, and the components used in the system cause the entire sensor network to be immune to other light sources – which was the flaw in our IR sensor design.

The Transmitter

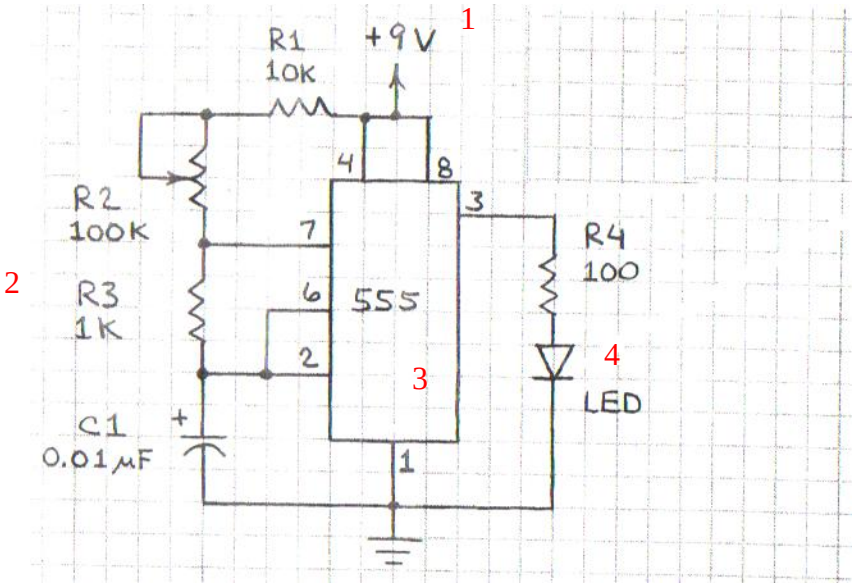

The transmitter is composed of 4 main sections, each which play an integral role in outputting a single frequency of light that will then be detected by our sensor network. We have denoted the 4 main parts by red numbers, numbering 1 through 4. Number 1 represents the input power source, or in this case a 9V battery, which is simply used to power the entire transmitter circuit. Number 2 represents the resistive elements of the circuit which when used with a capacitor (C1) cause the input signal to be filtered for a single frequency. The 555 Timer, or number 3, is basically used as a controller. It controls the output based on the input from the various sources of power and resistance combined. We believe it is essentially used as a reducer in this case to make sure there is not too much voltage going through the various components in our circuit, mainly the capacitor and the LED. Finally we have number 4 which is the LED that is emitting light at a certain frequency based on the setup which will then be detected by the receiver.

The Receiver

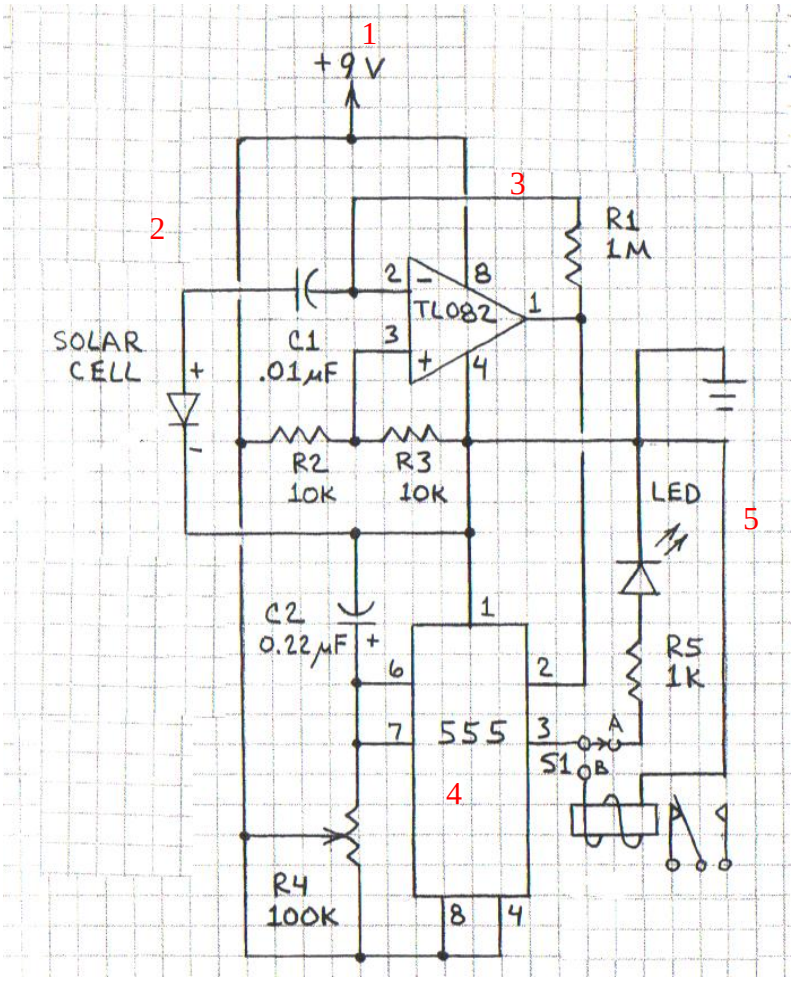

The receiver network has been constructed in a fashion to allow only a certain frequency of light to be detected and used with a response given by the user. In this case, when our frequency of light is detected, we have an LED that flashed at position 5.

Once again, this network is powered by a voltage source at position 1, and then at position 2, we have a solar cell which accepts all light sources and sends their signals into the circuit. However, the solar cell at #2 is being used once again with a capacitor (C1) and resistors in order to filter any external light that may be entering the circuit from the sun, or other light courses. Once this signal is captured, at #3 there is an Op Amp, or an amplifier, which amplifies the light frequency signal and sends it down to position #4 another 555 timer that regulates the signal so that it can be used at position #5, the output. In this case the 555 timer has once again had it's input signal regulated by the resistors and capacitors that are attached to it's terminals and they have been chosen by the specifications that Radio Shack has set in order for their design to work. The relay that you see between #4 and #5 is simply used to designate where the output of the 555 timer goes. When the relay is at switch A the signal goes to our #5 LED, which flashes when the receiver detects the

proper frequency of light. When the relay switch is placed to position B, then the output signal of the receiver can go to whatever external end the user desires. It is basically used as another area to attach an alternative circuit to use the frequency signal produced by the receiver.

The main advantage of this system is that it eliminates all other sources of light and will work as intended with only 1 frequency of light that the transmitter emits and the receiver detects (as long as the 2 networks are properly configured to emit and receive at the same frequency). This system is considerably more complicated than our original IR sensor design but then it also takes into account the need to immunize a sensor system to exterior light sources which is the main problem our design has.

Global Positioning System Technology

Installing a GPS as part of our design has been analyzed to look at the feasibility of actually implementing it as a solution to combine operator negligence.

To figure out what kind of GPS we need, we asked Mr. Robert Malouin, president of *Innotag, Agriculture Innovation, Technology & Precision Farming*, the only dealer in the province of Quebec of the Cultiva and AutoFarm Precision Farming systems. Their products include many GPS solutions for agricultural technology, virtual guidance, and assisted steering systems that can be installed on almost any machinery models on the market. The next section will describe a solution brought to us by Mr. Robert Malouin that could directly address the problem of our combine operators not respecting the field limitations and their proximity of each other and briefly explained that there are technologies that use what's called DGPS that can have an accuracy of about a foot, and DGPS-RTK that can have a precision of about 1 inch !

Cultiva ATC System: as discussed earlier in the design approach, one of the main constraints in using a GPS as part of our system is the fact that precise GPS are very expensive and not suitable for other uses than military usage. However, the Cultiva ATC system uses a Differential Global Positioning System

with Real Time Kinetic technology (DGPS-RTK) that allows accuracy under a range of a few inches. This system is provided with a touch screen monitor that can be installed into the tractor dashboard. This monitor can show the pathway followed by the tractor or the machinery and keep the key information in memory so the transfer of data from the inboard computer and a desktop computer can be made. In addition, software is provided with the Cultiva ATC system to allow the farmer to keep track of information coming from the GPS, such as GPS coordinates of the field. This information can be used by the software to anticipate the end of a field and send a signal to the tractor to rotate (when equipped with an auto steering system).

This system can be used to accommodate the early warning system: using a common GPS system, the owners of the fields where vegetables will be harvested can create a list of coordinate points of any field boundaries or obstacles and submit its data to Les Fermes Saurette company. With the user-friendly software that comes along with the DGPS, the technician hired by Les Fermes Saurette can enter the data into the software and create a “Boolean” map of the field. Once in operation, the software will warn the operator when there is an obstacle coming within the “radius of protection” of the harvester. It works the same way as when the DGPS detects the end of the field: instead of sending an instruction to the auto-steering system, it warns the operator of the presence of an object or of a ditch. According to Mr. Robert Malouin, it is feasible to modify the software and the hardware of the computer within the monitor to send a signal under the form of a light or sound when there is an obstacle nearby that is identified by the Cultiva ATC system.

The integration of GPS technologies into our design represents a massive investment. The Cultiva ATC DGPS RTK technology comes in three different parts. The roof module (a multi-antenna GPS), the monitor and software that controls the data inputs and outputs and the base station that has to be placed somewhere around the field; this station is used to communicate with the satellites. The price of the base station is about CAN$ 10,000. The price of the roof module and the monitor and software is about CAN$ 40,000/unit. This price

includes installation of the multi-antenna GPS at the top of the combine and the installation and configuration of the software and monitor that controls the module.

The investment required to install the GPS technology on each of the six combines would be CAN$ 250,000.

Total price of the installation of the GPS technology on all of the six combines $CAN			
Product	Quantity required	Price per unit	Total price
Base station	1	10,000	10,000
Roof module, monitor and software	6	40,000	240,000
Grand Total			**250,000**

Combines running into ditches or hitting obstacle such as trees or building (accidents that can be avoid with this GPS technology), represent about 50% of the total money lost due to collisions of any kinds. Since $25,000 to $30,000 are lost every year in repairs and parts of combines, and another $30,000 is lost in revenue due to not operating the machinery; about $30,000 can be saved every year when using a GPS on each combines.

Equation 3 – Annual Money Lost

Annual money lost = (money lost in repairs and parts + money lost due to machinery not operating) * 50%

= ($30,000 + $30,000) * 0.5

= $ 30,000/yr

The payback period of installing this technology to avoid collisions is then 8.3 years.

Equation 4 – Payback Period

Payback Period = Cost of project / annual money lost

= $250,000 / $30,000/yr

= 8.3 years

Since a pea combine has a lifetime of about 15 years before replacing it, half of the lifetime of a combine is needed to pay the investment back for the

installation of the GPS system on 6 combines: which definitely seems worth the investment.

Please see the appendix for the commercial pamphlet of the GPS system involved in our discussions.

Consultants Used

Parallax Inc.
www.parallax.com
599 Menlo Drive, #100
Rocklin, CA 95765
USA
Telephone: (916) 624-8333 or (888) 512-1024 (US only)
Fax: (916) 624-8003

Robert Malouin
President, Innotag
1661, de l'industrie
Beloeil (Québec)
Canada
J3G 4S5
Telephone : 450-464-7427
rmalouin@innotag.com

Loic Dewavrin
Ferme Longpre Inc.
Les Cedres, Qc
Telephone: 450-452-4559

Dr. Ning Wang
McGill University
Professor - MS1-026
Bioresource Engineering
MACDONALD STEWART Building
Telephone: 514-398-7781

Dr. Raghavan
Professor - MS1-098
Bioresource Engineering
MACDONALD STEWART Building
Telephone: 514- 398-8731

Normand Saurette
Les Fermes Normand Saurette inc.
Director and owner
St-Pie-de-Guire
Office: 450-461-1988
Cell : 514-895-1285

Yves Duquet
Les Aliments Carrière inc.
Agriculture Manager
16, Champagnat street
Bedford, Quebec
Canada J0J 1A0
Office: 450-248-4336 p. 227
Fax : 450-248-0748
Yves.duquet@carrierefoods.com

Jean-François Gaudette
Les Aliments Carrière inc.
Agriculture Technician
16, Champagnat street
Bedford, Quebec
Canada J0J 1A0
Office : 450-248-4336 p. 230
Fax : 450-248-0748
Cell : 514-444-5519
jean-francois.gaudette@carrierefoods.com

Luc Lussier
Les Fermes Saurette inc.
Mechanic
Cell : 450-223-4226

Luc Choquette
Les Fermes Saurette inc.
Combine Harvester Operator
Ti_luc2@hotmail.com

Mr. Neil Hellas
Graduate Student
Bioresource Engineering
Macdonald Campus, McGill University
MS1-020

Mr. Razmik Musakhanean
Electrical and Computer Technician
Baie D'Urfe, Quebec

References

(1) Payback Period. Investopedia, 2006. Online at: http://www.investopedia.com/terms/p/paybackperiod.asp

(2) AutoFarm ATC Brochure, Online at: http://www.cultiva.com/_resources/uploads/files/2576_AutoF_CultivaATC_HR.pdf

(3) AutoFarm RTK AutoSteer Brochure, Online at: http://www.cultiva.com/_resources/uploads/files/A1+Steering+Brochure.pdf

(4) Les Aliments Carrière: Online at : http://www.carrierefoods.com/

(5) Driving Farm Productivity, AutoFarm Promotional CD, Novariant Companies, 2004

(6) BCMH Harvester website, Online at: http://www.bcmhtech.com/, 2003

(7) Danny Goodman, *Graphical Resistance Calculater*, 1996. Online at: http://www.dannyg.com/examples/res2/resistor.htm

(8) Servo Magazine, *Technical Forums*. T&L Publications, 2005. Online at: http://www.servomagazine.com/forum/

(9) Active Electronics Store, ActiveTech 2006. Online at: http://www.active-tech.ca

(10) Abra Electronics, Abra Electronics Corps, 2006. Online at: http://www.abra-electronics.com/

(11) Source The Electronic Source Book, Prism Buisiness Media & Source ESB, 2006. Online at: http://www.sourceesb.com

(12) Photoconductive Cell specifications, Shenzhen Oande Optical& Electronic Co., Ltd. Online at: http://www.oande.cn/product/cds/GL5516.htm

(13) Potentiometer specifications, Bournes – Reliable Electronic Solutions. 2006. Online at: http://www.bourns.com/PDFs/3296.pdf

Appendix